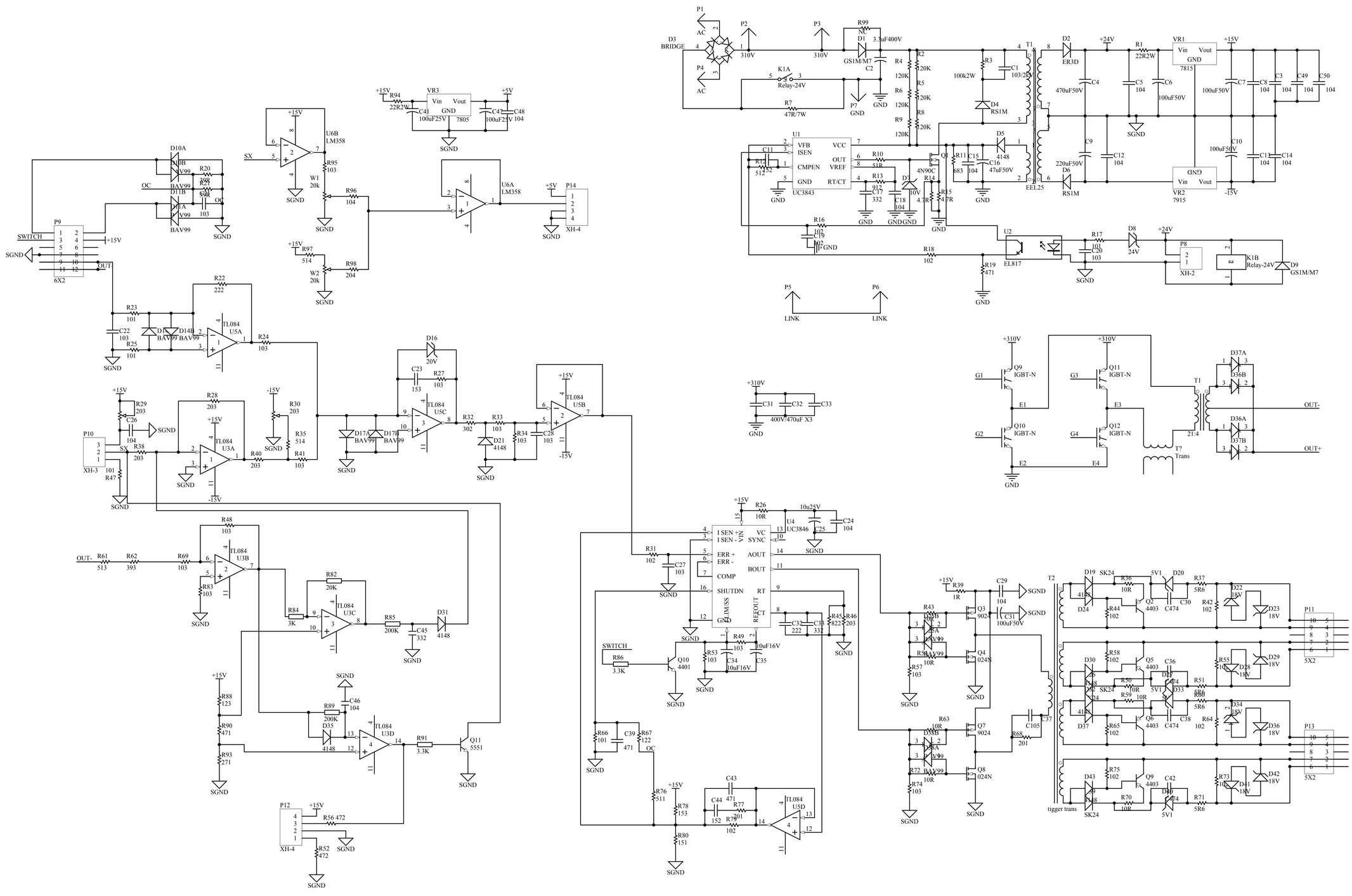

Title		
Size A2	Number	Revision
Date: 2013-12-04	Sheet of	
File: E:\ \.\MT-MMA .SCHDOC	Drawn By:	