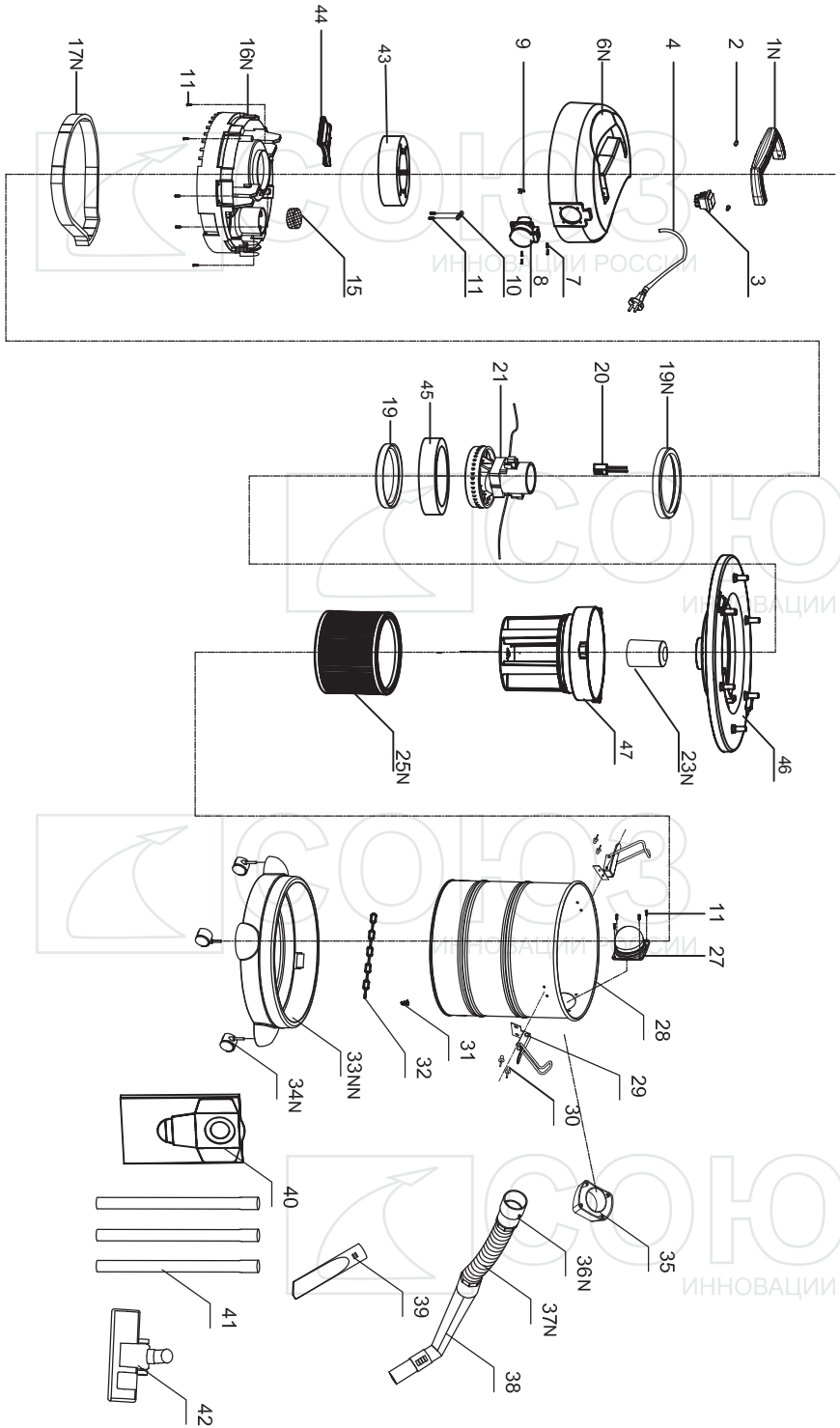

ПСС-7320

NO.	DESCRIPTION	NO.	DESCRIPTION
1N	HANDLE	29	LOCK
2	HANDLE PIN	30	RIVET
3	SWITCH	31	SCREW
4	PLUG & CABLE	32	STEEL CHAIN
6N	TOP COVER	33NN	BASE
7	TAPPING SCREW	34N	WHEEL
8	POWER SOCKET	35	OUT CONNECTOR
9	INSERT PIECE	36N	HOSE CONNECTOR
10	CABLE CLAMP	37N	HOSE
15	CIRCLE FILTER	38	BENDING TUBE
16N	MIDDLE COVER	39	FLAT NOZZLE
17N	SPONGE FILTER	40	PAPER BAG
19N	CIRCLE DAMPING	41	PLASTIC TUBE
20	CAPACITOR	42	FLOOR BRUSH
21	MOTOR ASSEMBLY	43	SPONGE
23N	WATER VALVE	44	COVER
25N	HEPA FILTER	45	MOTOR SPONGE
27	INTERNAL CONNECTOR	46	MOTOR COVER
28	CONTAINER	47	MOTOR HOLDER

RU-SO20170316-02

СОЮЗ
ИННОВАЦИИ РОССИИ