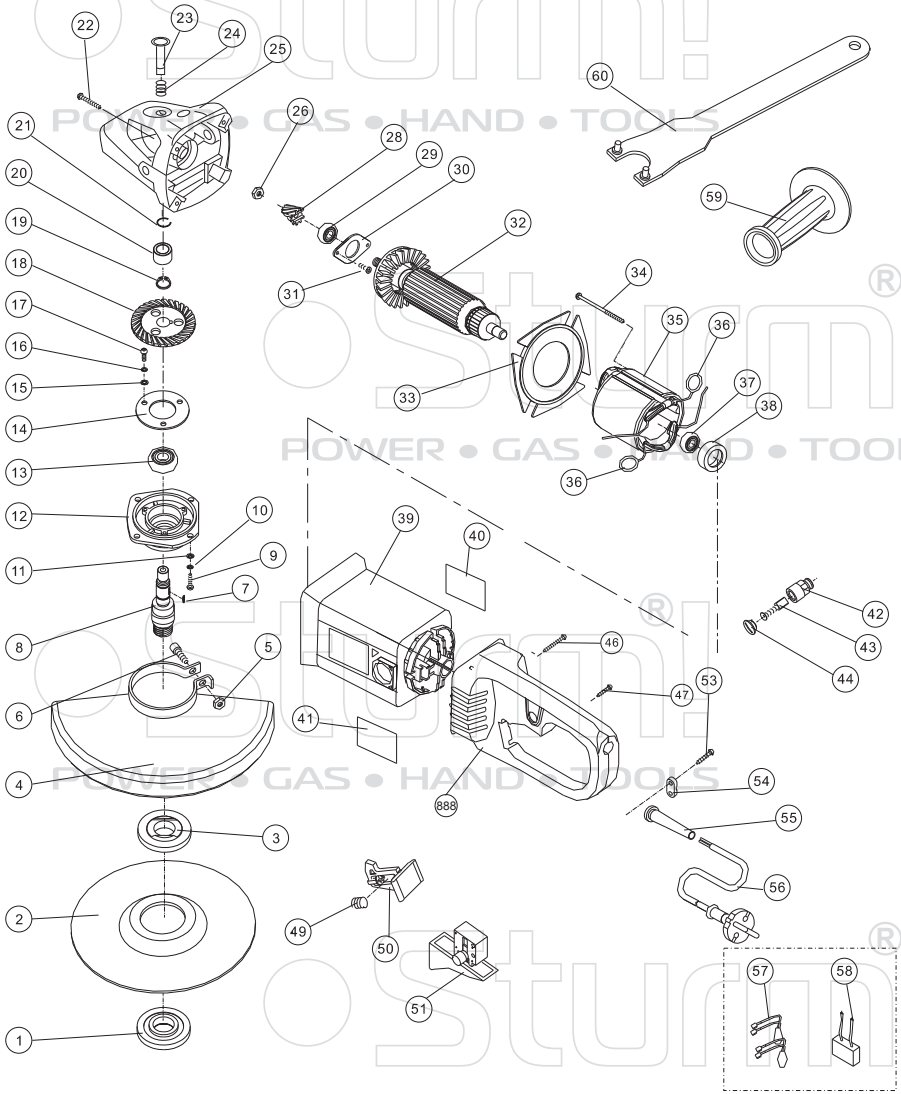

AG9024R

NO.	DESCRIPTION	NO.	DESCRIPTION
1	OUTER FLANGE	31	SCREW
2	GRINDING WHEEL	32	ARMUTURE
3	INNER FLANGE	33	WIND GUARD
4	WHEEL COVER	34	SCREW
5	NUT	35	STATOR
6	SCREW	36	LINK SPRING
7	WOODRUFF KEY	37	BEARING 629Z
8	OUTPUT SPINDLE	38	BEARING BUSHING
9	SCREW	39	HOUSING
10	SPRING WASHER	40	NAME PLATE
11	PLAIN WASHER	41	TRADE MARK
12	FORE COVER	42	BRUSH HOLDER
13	BEARING 6202Z	43	CARBON BRUSH
14	BEARING COVER	44	BRUSH HOLDER CAP
15	PLAIN WASHER	46	TAPPING SCREW
16	SPRING WASHER	47	TAPPING SCREW
17	SCREW	49	SPRING
18	BIG GEAR	50	SET PIECE
19	CIRCLIP FOR SHAFT	51	SWITCH
20	OGALLAY BEARING	53	SCREW
21	RETAINER RING	54	CABLE CLIP
22	TAPPING SCREW	55	CABLE SLEEVE
23	LOCKING PIN	56	CABLE
24	BREAK SPRING	57	INDUCTOR
25	GEAR BOX	58	CAPACITOR
26	NUT	59	SIDE HANDLE
28	PINION GEAR	60	SPANNER
29	BEARING 6001Z	888	HANDLE ASSEMBLE
30	BEARING COVER		

ST20101214

Sturm! POWER • GAS • HAND • TOOLS