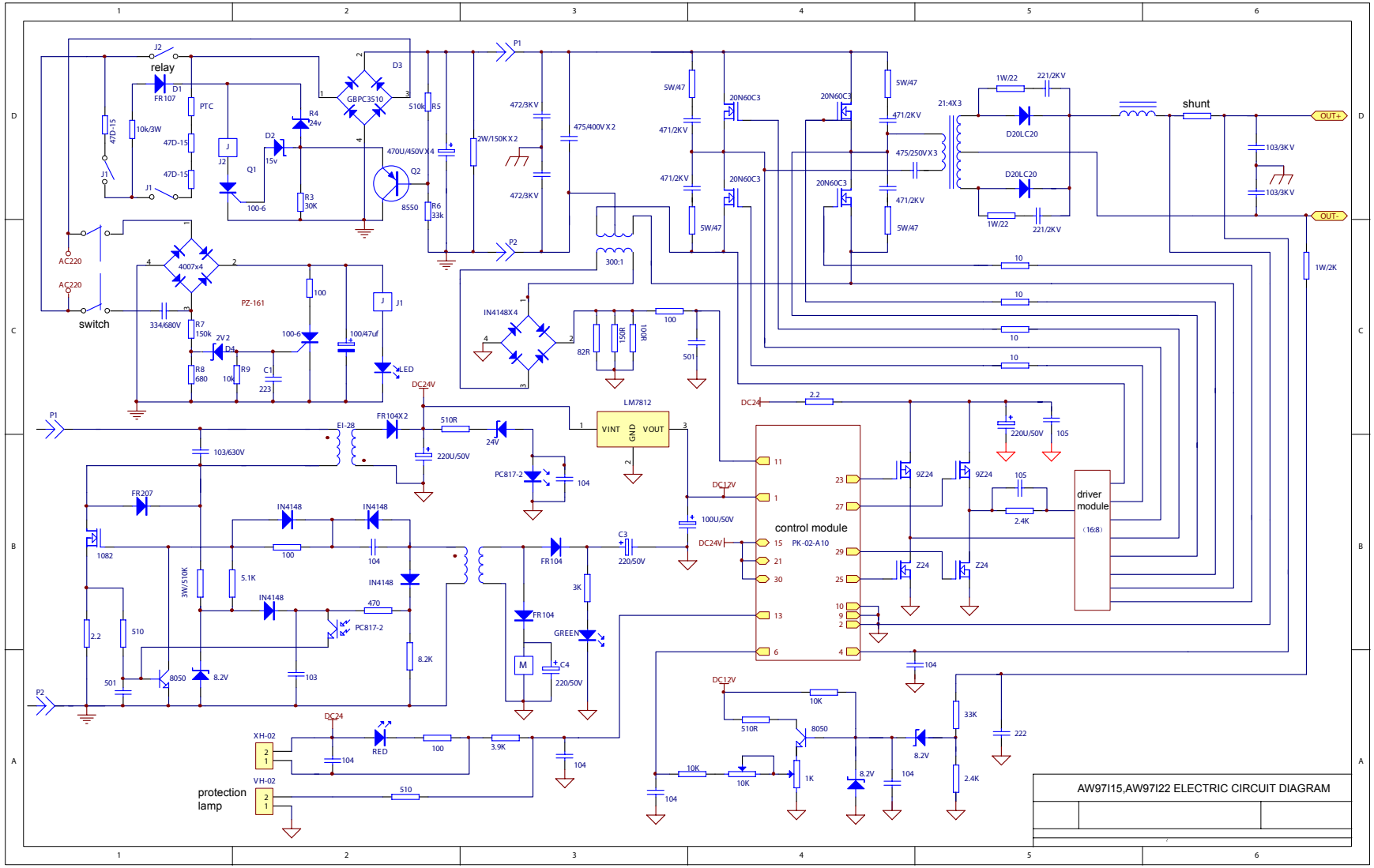
AW97I15,AW97I22 ELECTRIC CIRCUIT DIAGRAM
relay
switch
shunt
control module
PK-02-A10
driver module
(16:8)
protection lamp
OUT+
OUT-
AC220
LM7812
VINT
GND
VOUT
GBPC3510
4007x4
PZ-161
GBPC3510
20N60C3
D20LC20
GREEN
RED
LED
XH-02
VH-02