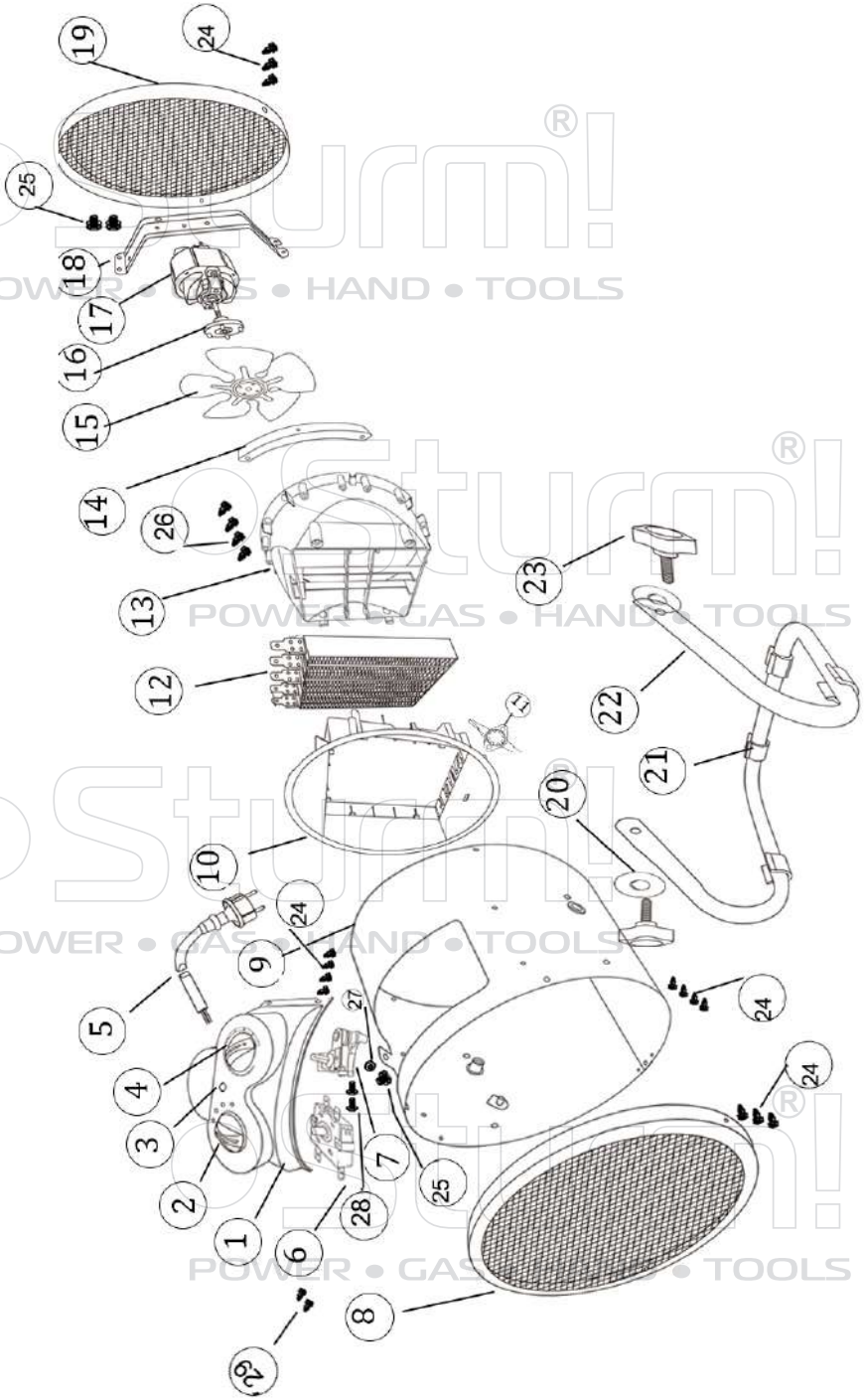

FH2230RC

NO.	DESCRIPTION
1	Control cover
2	Switch knob
3	Power indicator
4	Thermostat knob
5	Power cord and plug 3G*1.5m²
6	Switch 250V 16A
7	Adjustable thermostat 16A/250V/85℃
8	Front grill
9	Outer casing
10	Front plastic
11	Thermal cut-off 250V/16A/75℃
12	Heating element 3000W/230V/50Hz
13	Back plastic
14	Inner support
15	Fan
16	Fan hastener
17	Motor YJ58-20/230V/50Hz
18	Motor support
19	Back grill
20	Non-slip mat
21	Support mat
22	Support φ16
23	Hand screw M8*30
24	Screw 3.5*10
25	Screw M4*10 with gasket
26	Screw 3.5*14
27	M4 nut
28	Screw M4*10
29	Screw 3*16

UK-ST20200731

Sturm! POWER • GAS • HAND • TOOLS