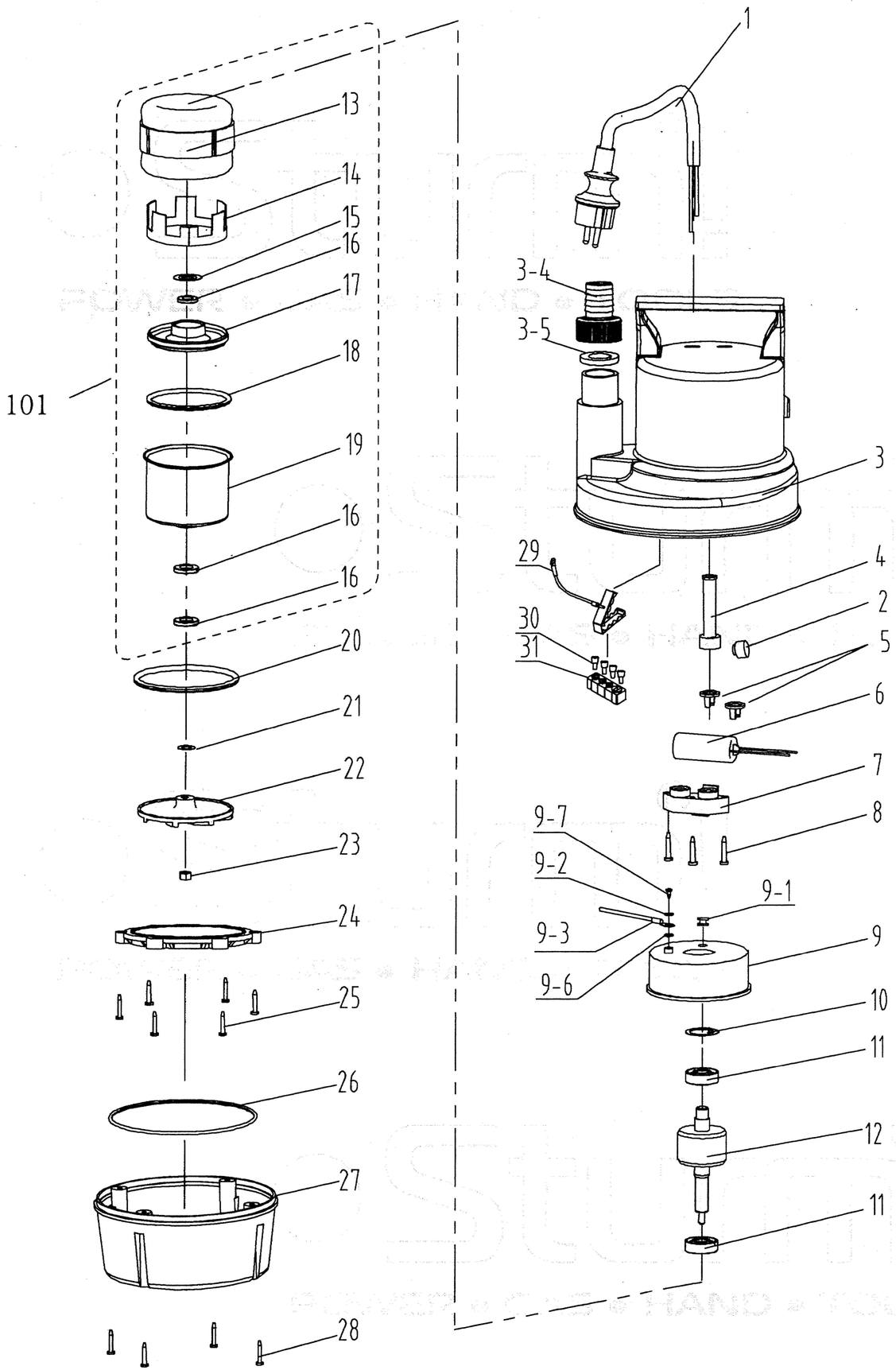

WP9704SW

NO.	DESCRIPTION	NO.	DESCRIPTION
1	CABLE	14	MOTOR BUSH
2	RUBBER PLUG	15	WASHER
3	MAIN PUMP BODY	16	SKELETON SEAL RING
3-4	OUTPUT CONNECTOR	17	MOTOR FRONT SLEEVE
3-5	SEAL RING	18	"O" SEAL RING
4	CABLE SLEEVE	19	FRONT MOTOR COVER
5	CABLE CLAMP	20	"O" SEAL RING
6	CAPACITOR	21	WASHER
7	CABLE CLAMP BLOCK	22	IMPELLER
8	TAPPING SCREW	23	NUT
9	REAR COVER	24	PRESSING RING
9-1	SLEEVE	25	TAPPING SCREW
9-2	WASHER	26	"O" SEAL RING
9-3	EARTHING WIRE	27	BASE
9-6	WASHER	28	TAPPING SCREW
9-7	SCREW	29	EARTHING WIRE COVER
10	WAVE WASHER	30	CONNECTING WIRE CUP
11	BEARING 6201	31	RUBBER CLAMP
12	ROTOR	101	STATOR ASSEMBLY(13+14+...+19)
13	STATOR		

UK-ST20171214